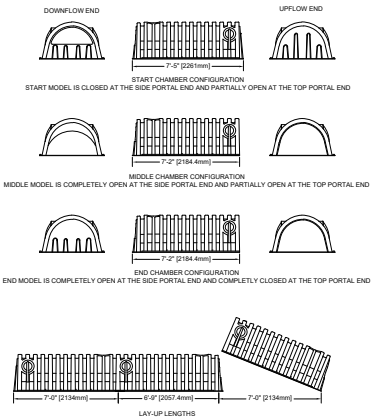

NOTE: 1. Start chambers (closed at the side portal end) are placed at the inflow end of the rows.
2. Begin placements with Start chambers and end rows with End chambers.
3. Place first rib of next chamber in the row over last rib of previous chamber.

STORMCHAMBER® EXAMPLE CONFIGURATION

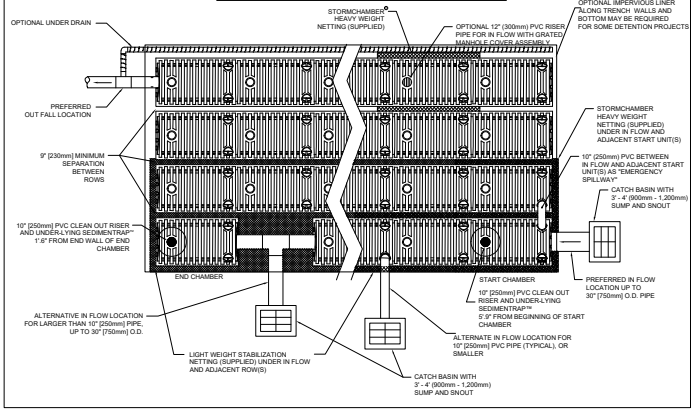

STORMCHAMBER® WITH SEDIMENTRAP™

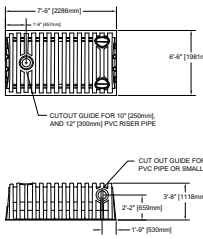

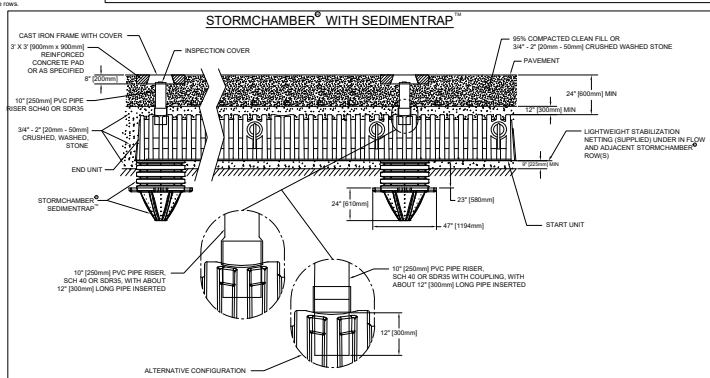

STORMCHAMBER® TYPICAL CROSS-SECTION INSTALLATION
(PROVIDED AS AN ILLUSTRATED EXAMPLE ONLY)

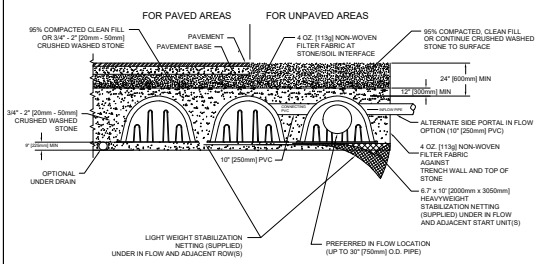

RECOMMENDED STACKED INSTALLATION OF STORMCHAMBER® FOR STORMWATER MANAGEMENT
(PROVIDED AS AN ILLUSTRATED EXAMPLE ONLY)

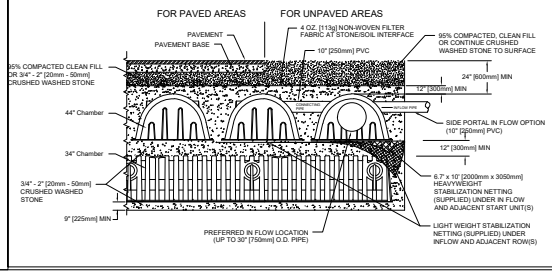

INSTALLATION OF STORMCHAMBER SYSTEMS (can be downloaded and printed from www.stormchambers.com)

TRENCH PREPARATION

1. Do not excavate trench until dry weather is forecast long enough to allow at least coverage of the StormChamber system with filter fabric prior to raining.

2. Excavate to a width and length sufficient to accommodate the number of StormChambers plus a minimum one foot border around the entire bed. The bottom of the bed must be level, unless otherwise specified.

3. Do not use heavy equipment on the excavated trench bed in order to avoid soil compaction.

4. If use of heavy equipment on the excavated trench bed can not be avoided, scarify the trench bottom and break up soil clumps and till smooth before adding the stone base.

5. Line trench walls with a 4-ounce [113g] non-woven filter fabric such as Mirafi 140N or 140NC, Synthetic Industries 401, or AMOCCO 4545 or 4535. Overlap adjacent filter fabric by at least 2' [600mm]. Do not place filter fabric under the StormChambers.

6. Unless otherwise specified, place 9" [230mm] of crushed, washed, 3/4" - 2" [20mm - 50mm] hard, non-calcarious stone on the bottom of the trench. The base must be level and at a zero grade.

7. If it becomes impractical to level the stone base by hand, use a low pressure, tracked dozer, not exceeding 1,100 lbs/sf [500kg/sf], maintaining at least 9" [230mm] of stone under the tracks at all times.

STORMCHAMBER INSTALLATION

1. Verify quantities of StormChamber units and other materials that have arrived. If anything is damaged or missing please contact StormChamber immediately.

2. Start building the StormChamber system with the Start Unit StormChambers at the inflow end of the StormChamber system. The Start Units are completely closed at the end with the two side portals.

3. Roll out rows of StormChamber light weight stabilization netting (provided with the StormChambers) parallel with the inflow and adjacent(s). Overlap the rows by approximately 1' [300mm]. Keep the netting flat; if moved, straighten and flatten out.

4. Place one piece of the StormChamber heavy weight stabilization netting (provided with the StormChambers) under each StormChamber that will be receiving inlet storm drain pipes. Cut a hole in the netting to fit snuggly around the exposed top of the SedimenTrap. Place on top of the light weight netting and extend beyond all edges of the StormChamber. The purpose of heavy weight stabilization netting is to function as a "splash pan", preventing excavation of the underlying stone and soil, while allowing infiltration to occur.

5. Place the Start Unit StormChambers (completely closed at the end with the two side portals), spaced a minimum of 7' 3" [2057mm] apart at the center line of the chamber crown. Position the closed ends at least 1' [300mm] from the trench wall.

6. Cut open the side portals for the inflow storm drain pipes (size and location specified on the plans) and lateral connecting pipes between StormChamber Start Units (8" [200mm] or 10" [250mm] Schedule 40 or SDR 35 PVC; 8" [200mm] or 10" [250mm] HDPE will not fit) with a reciprocating saw, router bit on a drill, or keyhole saw along the defines indented circle. 10" [250mm] PVC pipe is the largest diameter pipe that can fit into the side portals. If the inflow storm drain pipe is specified to enter the closed end wall, place a piece of the pipe against the end wall. Trace the diameter of the pipe on the end wall and cut out the circle. The maximum pipe size that can be inserted into the end wall is 36" [915mm] O.D.

7. If a cut extends more than 0.5" [13mm] beyond the intended diameter, place a piece of the StormChamber non-woven filter fabric over the hole, cut an "X" just short of the width of the opening, and insert the pipe.

8. Mark the midpoints of 8" [200mm] or 10" [250mm] PVC pipe and insert into the adjacent StormChamber Start Units where specified so that the marked midpoint is centered between the two adjacent StormChambers. Pipe length should be sufficient to extend 6" [150mm] - 12" [300mm] into both adjacent StormChambers (about 4' [1200mm]). In order to facilitate placement, install the lateral connecting pipes in the specified StormChambers before attaching the next StormChambers in the row.

9. If the locations of row - connecting PVC pipes are not specified, add 8" [200mm] or 10" [250mm] PVC pipes to connect the inflow chamber and adjacent chamber(s) of the inflow row.

10. Place the first rib of a Middle Unit (completely open at side portal end partially open at top portal end) over the last rib of each of the Start Unit StormChambers.

11. Screw the StormChambers together at their base on both sides with regular 3" [75mm] dry wall screws. One screw on each side is sufficient to temporarily hold the StormChambers together until the stone is place. The gap between the two StormChambers near their base must be closed enough to prevent stone from migrating into them to prevent potential surface subsidence.

12. Continue placing and screwing the rest of the StormChambers, one at a time, leaving at least 1' [300mm] between the end of the End Unit (completely open at the side portal end, completely closed at the top portal end) and the trench wall.

13. For large StormChamber systems it is advisable to install and backfill a few StormChambers of all rows at a time as you continue to install the rest of the chambers.

14. Deposit 3/4" - 2" [20mm - 50mm] crushed, washed, hard stone directly along the centerline of the StormChambers to evenly flow down each side to keep the StormChambers in proper alignment. Avoid the use of limestone, if possible. Limestone gets pasty when wet and will tend to reduce the void spaces in the stone. Do not place the stone directly against the closed end walls at the start and end of the rows. Add stone to 6" [150mm] above the StormChambers, unless otherwise specified.

15. Level the stone cover with a vibratory compactor, not to exceed a dynamic force of 10,000 pounds [4536kg], or with a low pressure, tracked vehicle not exceeding 1,100 lbs/sf [500kg/sf].

IMPORTANT: If a low pressure, tracked dozer is used, do not run the dozer on anything less than 6" [150mm] of stone above the StormChambers. Spread stone is small piles to prevent movement of the StormChambers. Caution must be exercised when placing stone on top of the StormChambers so that excessive pressure is not applied directly on the StormChambers by equipment "buckets".

16 Cover the stone with StormChamber non-woven filter fabric. Overlap adjacent sheets by at least 2' [600mm].

BACKFILLING

1. Backfill soil must be free from large stones and large organic material (e.g. tree limbs and root stumps), and is capable of being compacted to at least 90% of the Standard Proctor Test (AASHTO Method T-99). If not, crusher run or other suitable backfill material must be used. The stone surrounding the StormChambers can also be extended up to the pavement subgrade, if desired.

2. Compaction of the soil backfill must be achieved in 6" [150mm] - 8" [200mm] lifts. Grading of lifts should start in one corner of the system with a low pressure, tracked dozer, with a pressure not exceeding 1,100 lbs/sf [500kg/sf], keeping at least 1' [300mm] of fill in front of the blade at all times. Compact lifts to 90% Standard Proctor with tracked vehicles not exceeding 1,100 lbs/sf [500kg/sf], or with a hand operated compactor or vibratory roller not exceeding a dynamic force of 20,000 lbs [9071kg].

3. Keep the StormChamber system closed or protected from receiving sediment until the site is completely stabilized (grass growing and all pavement placed).

IMPORTANT: After compaction of backfill and setting of final grade, avoid parking on or traversing over the StormChamber installation with heavily loaded trucks and heavy equipment until paved.

IMPORTANT: These instructions assume accepted construction procedures and trucks that do not exceed specified DOT load limits. Uncustomary loads or improper load distributions in vehicles may require additional cover. Contact StormChamber for installation under abnormal conditions. Installations not in compliance with these instructions will void warranty.

PRODUCT ENGINEERING SPECIFICATIONS FOR STORMCHAMBER

Each chamber will be formed from high molecular weight/high density polyethylene.

Each chamber will be composed of at least 40% recycled material.

The stone base that the chambers are placed on will not be compacted in order to avoid compaction of the stone-soil interface, which restricts soil infiltration.

The chamber system will be designed without filter fabric under the chambers in order to avoid restriction of soil infiltration, which occurs from the normal clogging of the filter fabric from sediment and debris deposition.

Use of filter fabric between the soil and stone backfill layer and lining the side walls of the excavated area will be required to prevent intrusion of soil or silt into the chambers and surrounding stone.

Each chamber will be capable of supporting a minimum of 16,000 pounds [7,257kg] per square foot (i.e., two times the AASHTO H-20 Wheel Load Rating).

Each chamber will be capable of being installed with a maximum of 12 feet [3657mm] of cover above the crown of the chamber.

Each chamber system will be capable of being installed with a minimum of six inches [150mm] of stone base.

Each chamber will be 44" [1118mm] high, 78" [1981mm] wide and 90" [2286mm] long.

Lay-up length will be 7' [2134mm] (start and end unit) and 6'9" [2057.4mm] (middle unit).

Each chamber will have 12 ribs of approximately 3.6" [91.4mm] in height, 3.8" [96.5mm] wide at the top and tapering to 4.4" [112mm] at the bottom. Spacing of the ribs at the bottom of the chamber will be approximately 4.9" [124mm] and approximately 3.2" [81.3mm] at the top. One smaller rib sized dimensionally to effectively nest under and interlock to connect units will be 2.9" [73.7mm] high, 3.3" [83.8] wide at the top of the rib, and 4.1" [104mm] wide at the base.

Overall height to the inside rib will be 40.44" [1027.18mm]. Overall height to the outside rib will be 44" [1118mm].

Each chamber will have a defined top portal which is structurally enhanced to compensate for loss of structural integrity when apertures are cut open to receive pipe. Each such portal will be capable to receive up to a 12" [300mm] PVC pipe.

Each chamber will have defined side portals on opposing sides which are structurally enhanced to compensate for loss of structural integrity when apertures are cut open to receive pipe.

Invert height for a 10" [250mm] PVC pipe through a defined side portal will be 21.25" [539.75mm]. Invert height for an 8" [200mm] PVC pipe through a defined side portal will be 22.25" [565.15mm].

Each chamber will be capable to accept an 8" [200mm] or 10" [250mm] PVC feed pipe through a defined side portal.

Each chamber will be capable to accept up to a 36" [915mm] OD pipe through its end wall.

Each chamber will be capable of storing at least 26 cubic feet per lineal foot with 9" [225mm] of stone below and 12" [300mm] above the chamber.

Each chamber system will be designed without utilizing a header pipe manifold system.

Stone diameter will be 3/4" - 2" [20mm - 50mm].

STORMCHAMBER® DESIGN DETAILS SHEET FOR 44" CHAMBER	For Availibility and Pricing Please Call: **StormChamber** TOLL FREE: 1-877-426-9128 E-mail: info@StormChambers.com	
	DRAWING REVISION 07-08-2015	NOT TO SCALE DRAWINGS