LM Open Type Linear Bearing

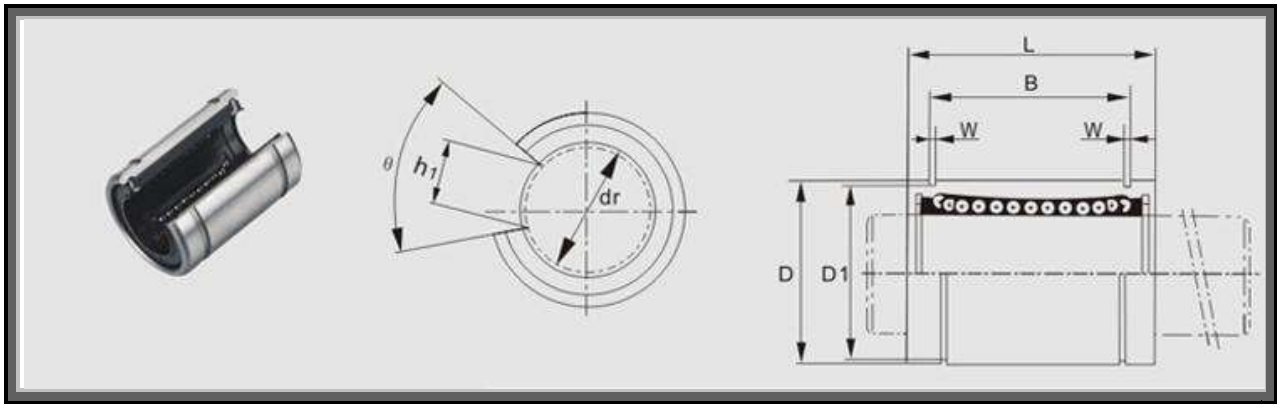

Model No.	Number Of Ball Rows	Main Dimensions												Eccentricity (Max.)	Basic Load Rating	
		Inscribed Circle Diameter		Outer Diameter		Length		Outer Locking Groove			W	h1	θ		Dynamic (kgf)	Static Co (kgf)
		dr	Tolerance	D	Tolerance	L	Tolerance	B	Tolerance	D1						
LM10OP	3	10	0 -0.009	19	0 -0.013	29	0 -0.20	22	0 -0.20	18	1.3	6.8	80˚	0.012	38	56
LM12OP	3	12		21		30		23		A20	1.3	8	80˚		42	61
LM13OP	3	13		23		32		23		22	1.3	9	80˚		52	79
LM16OP	4	16		28		37		26.5		27	1.6	11	80˚		79	120
LM20OP	4	20	0 -0.010	32	0 -0.016	42		30.5		30.5	1.6	11	60˚	0.015	88	140
LM25OP	5	25		40		59	0 -0.30	41	0 -0.30	38	1.85	12.5	60˚		100	160
LM30OP	5	30		45		64		44.5		43	1.85	15	60˚		160	280
LM35OP	5	35	0 -0.012	52	0 -0.019	70		49.5		49	2.1	17.5	60˚	0.020	170	320
LM40OP	5	40		60		80		60.5		57	2.1	20	60˚		220	410
LM50OP	5	50		80		100		74		76.5	2.6	25	60˚		390	810
LM60OP	5	60	0 -0.015	90	0 -0.022	110		85		86.5	3.15	30	60˚	0.025	480	1020